Remarkable Features

Trigger-Action Service

(with MODBUS)

Copyright© 2024 Seyeon Tech Co., Ltd

Table of contents

- On-site requirements
- Support plan for IP camera
- Trigger Action Service (TAS)
- Usage of TAS (MODBUS gateway)
- Enclosure : TAS Device
  - Sensor box (FW-MDS100, Flame, Smoke, Temperature detection)
  - Traffic Light Detector (FW-TLD)
- Contacts

Copyright© 2024 Seyeon Tech Co., Ltd

On-site requirements

- **Emergence of need for operation service of output device (e.g. alarm) depending on value of input device (e.g. sensor) or Open/Close status**

<Examples of On-site requirement>

- If the fire alarm is activated, an announcement must be made.
- When the water level rises, warning broadcasts and PTZ camera positions must be adjusted
- When the intrusion alarm is activated, the light must be turned on.

- **IP cameras support various conditions as above as a service.**
- **Trigger Action Service**

Copyright© 2024 Seyeon Tech Co., Ltd

Support plan for IP Camera

- **Is there a way to control numerous input and output devices in an IP camera?**
- **Is it possible to increase the number of built-in sensor inputs and alarm outputs of an IP camera without changing the hardware?**

- **Trigger Action Service (TAS)**
  that connects via RS-485 (or Ethernet) bus and controls various sensor inputs and alarm outputs using MODBUS protocol.

Copyright© 2024 Seyeon Tech Co., Ltd

Trigger Action Service (TAS)(1/3)

- Services supported by FlexWATCH® IP camera
- A service that controls input/output devices connected to IP cameras through the RS-485 bus and linked with the MODBUS protocol.
- A service that outputs the corresponding service through an output device or with a designated command when the input trigger conditions are met.

Copyright© 2024 Seyeon Tech Co., Ltd

Trigger Action Service (TAS)(2/3)

- Connect Input/Output devices such as Alarm equipment and Sensor equipment to FlexWATCH® Camera's RS-485 port,
- Control Input/Output devices from FlexWATCH® camera using an industry standard _ MODBUS,
- FlexWATCH® camera supports TAS service

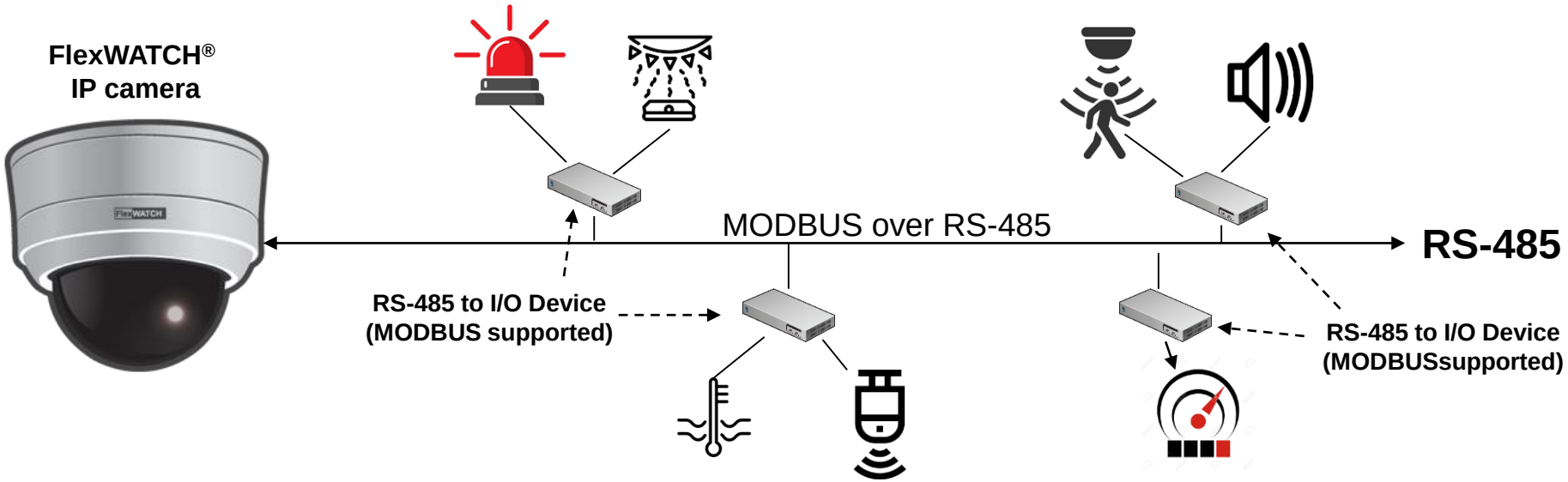

Copyright© 2024 Seyeon Tech Co., Ltd

Trigger Action Service (TAS) (3/3)

- **Currently defined input and output devices**

Trigger (Input devices)	Triggering conditions	Action (Output devices)
DI (Camera built-in Digital Input)	Input device's OPEN/CLOSE	DO (Camera built-in Digital Output)
 Input device connect with RS-485	Data threshold of input device	 Output device Connect with RS-485
	Schedule	Audio broadcast (Transmit the saved Audio)
		Execute network commands (ex : preset info of designated IP)
Future support Plan : AI event, Movements, etc.		Future support Plan ; email, ftp, etc.

Copyright© 2024 Seyeon Tech Co., Ltd

Usage of TAS (MODBUS gateway)

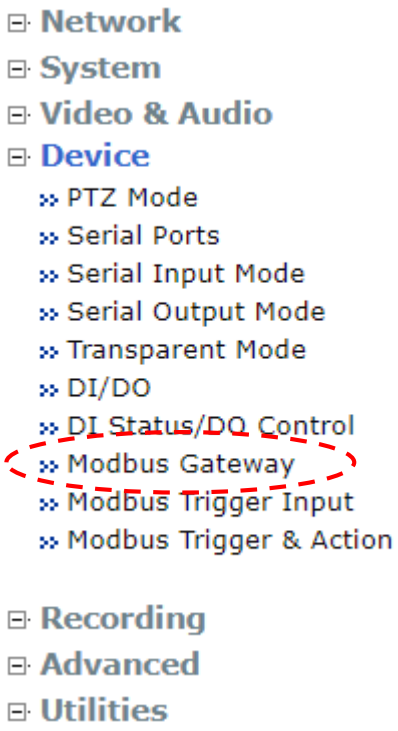

Modbus Gateway

Modbus Relay			
Enable	(●) Enable ( ) Disable		
TCP Port	502	(Default:502, 80 ~ 65535)	
RS485 Settings			
Port Number	1		
Baud Rate	38400		
Data Bit	8 bit		
Parity Bit	Odd		
Stop Bit	1 bit		
Device Settings			
Built-in Trigger & Action Devices	Device Support	Slave Address (Modbus)	Details
DI	Enable	128	
DO	Enable	129	
Preset	Enable	130	Go
Audio Alarm	Enable	131	Go

Apply

- Slave address is the input/output device ID (128, 129, 130, 131) previously specified in MODBUS.

Copyright© 2024 Seyeon Tech Co., Ltd

Usage of TAS (Trigger Input)

- Network
- System
- Video & Audio
- Device
  - PTZ Mode
  - Serial Ports
  - Serial Input Mode
  - Serial Output Mode
  - Transparent Mode
  - DI/DO
  - DI Status/DO Control
  - Modbus Gateway
  - Modbus Trigger Input
  - Modbus Trigger & Action
- Recording
- Advanced
- Utilities

Modbus Trigger Input

Trigger (Input)	IP (Local:127.0.0.1)	Port (80 ~ 65535)	Slave Addr	Function	Start Addr	Data Length	Data Type	Sensor Title	Unit
Trigger1	127.0.0.1	502	1	(04)Read Input Regi	0	1	signed short(Scale F	Dep of W:	cm
Trigger2	127.0.0.1	502	0	Disable	0	0	signed short		
Trigger3	127.0.0.1	502	0	Disable	0	0	signed short		
Trigger4	127.0.0.1	502	0	Disable	0	0	signed short		
Trigger5	127.0.0.1	502	0	Disable	0	0	signed short		
Trigger6	127.0.0.1	502	0	Disable	0	0	signed short		
Trigger7	127.0.0.1	502	0	Disable	0	0	signed short		
Trigger8	127.0.0.1	502	0	Disable	0	0	signed short		

- Define up to 8 trigger input devices
- Slave address is the ID of MODBUS device

Copyright© 2024 Seyeon Tech Co., Ltd

Usage of TAS (Trigger & Action Service)

- Network
- System
- Video & Audio
- Device
  - PTZ Mode
  - Serial Ports
  - Serial Input Mode
  - Serial Output Mode
  - Transparent Mode
  - DI/DO
  - DI Status/DO Control
  - Modbus Gateway
  - Modbus Trigger Input
  - Modbus Trigger & Action
- Recording
- Advanced
- Utilities

Modbus Trigger & Action Service

Modbus Trigger & Action	Add Trigger & Action

Modbus Trigger & Action Service Status

Trigger Action Service 1 : **Enable** — Edit | Del

If

Trigger Condition

Trigger (Input)	Operating Condition									Grouping
	Schedule								Event(Value Range)	
	Sun	Mon	Tue	Wed	Thu	Fri	Sat	Time		
Trigger1						✓		-	-	Or
Trigger1			✓					-	-	End

Then

Action (Output)	IP	Port	Slave Addr	Function	Start Addr	Data	Dwelling time
Action0	127.0.0.1	502	(130)Preset Run	(05)Write Single Coil	0	0	5
Action1	127.0.0.1	502	(131)Audio Alarm	(05)Write Single Coil	0	0	10

- Up to 8 Trigger Inputs supported
- Up to 16 Action Outputs supported
- Max 30msec polling time when one trigger input is connected

Copyright© 2024 Seyeon Tech Co., Ltd

Enclosure : TAS device

- **Sensor box (FW-MDS100)**
  - **Equipped with far-infrared ray-based flame sensor, temperature sensor, and gas (CO2) sensor**
  - **MODBUS integration (connect multiple cameras)**
  - **Linked to TAS input device, basically sensor information (flame, temperature, gas value) is displayed on OSD**
  - **43x42x20mm (Planned for release in Sep. 2024)**

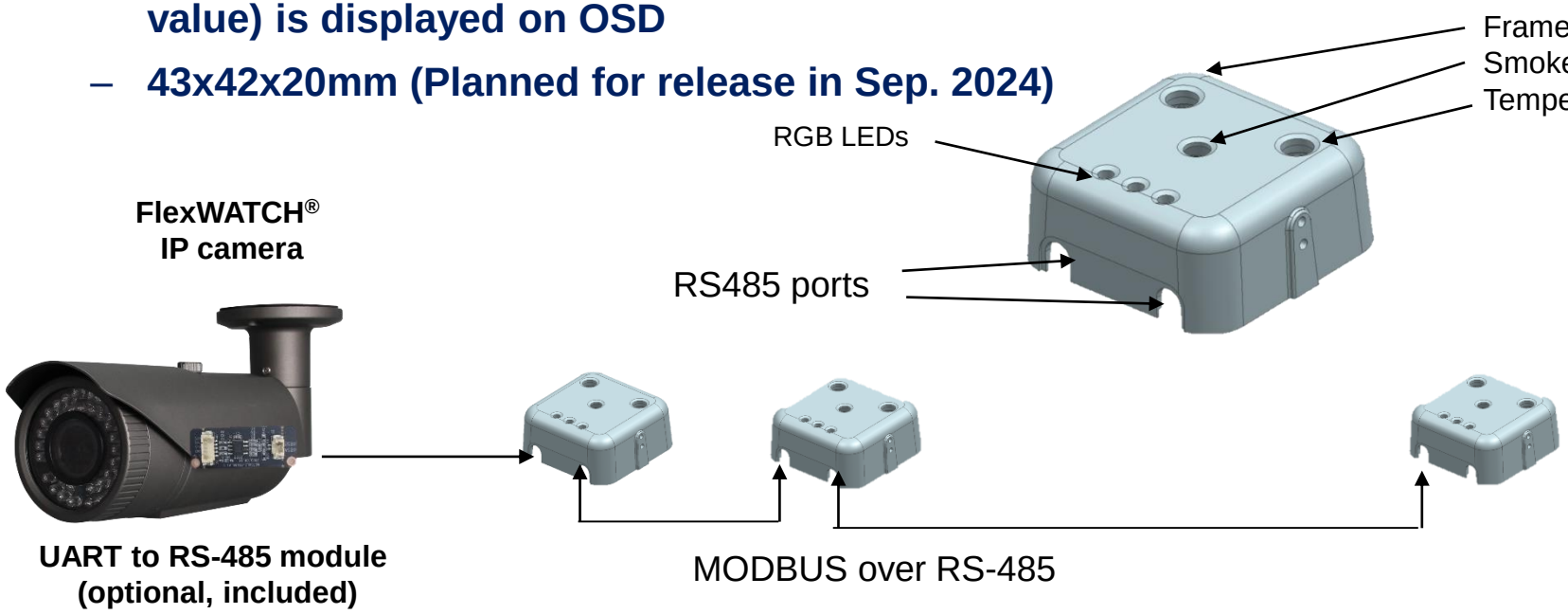

Copyright© 2024 Seyeon Tech Co., Ltd

Enclosure : TAS device

- **Traffic light flashing Detector (FW-TLD)**
  - **Signal detector using AC current detector (CT sensor)**
  - **For checking the real-time status of road traffic lights (RGB, arrow)**
  - **Can be displayed as an OSD on the screen by linking with the TAS input device.**
  - **It is used in the form of a board by being mounted on a junction box, etc. by the customer.**
  - **87x50mm board (Planned for release in Sep. 2024, housing available)**

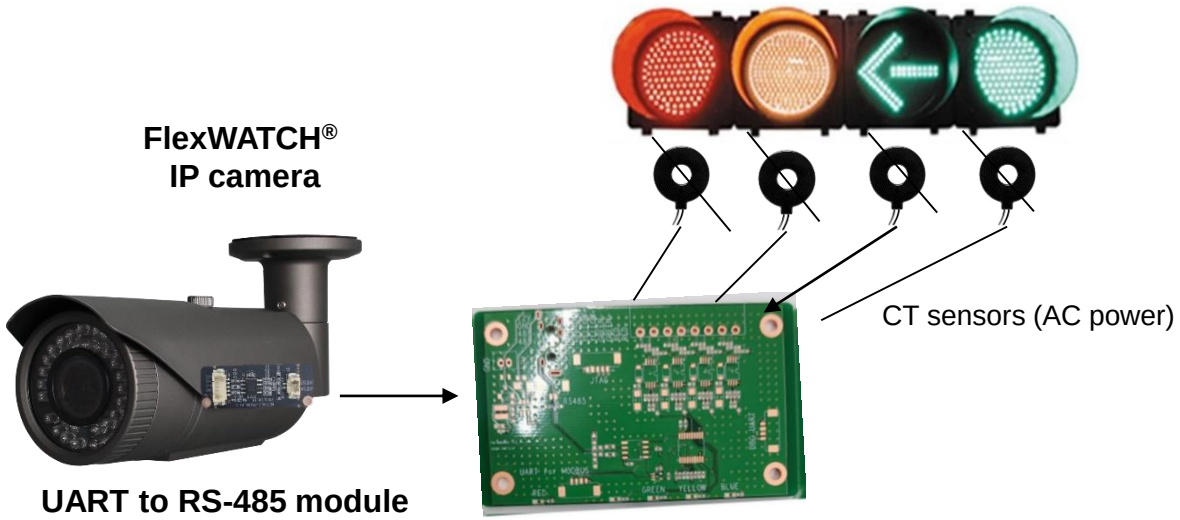

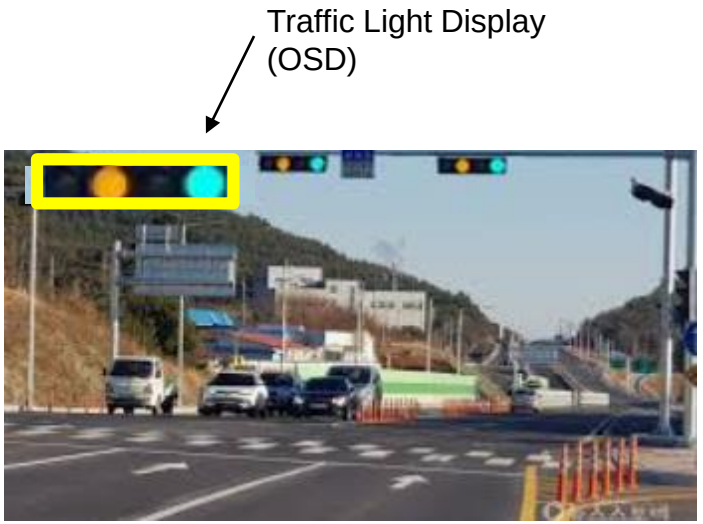

Video display with Traffic sign (OSD)

Copyright© 2024 Seyeon Tech Co., Ltd

Contacts

Head Office (Seoul in Korea)
Telephone: +82-2-2192-6866
E-mail: sales@flexwatch.com, sales@seyeon.co.kr

USA Office (CA, USA)
Telephone: +1-323-262-3682
E-mail: support@flexwatch.com

www.flexwatch.com

Copyright© 2024 Seyeon Tech Co., Ltd